HAWC2 Course

Lesson 3: Control interface

Risø DTU
National Laboratory for Sustainable Energy

Control through external DLL's

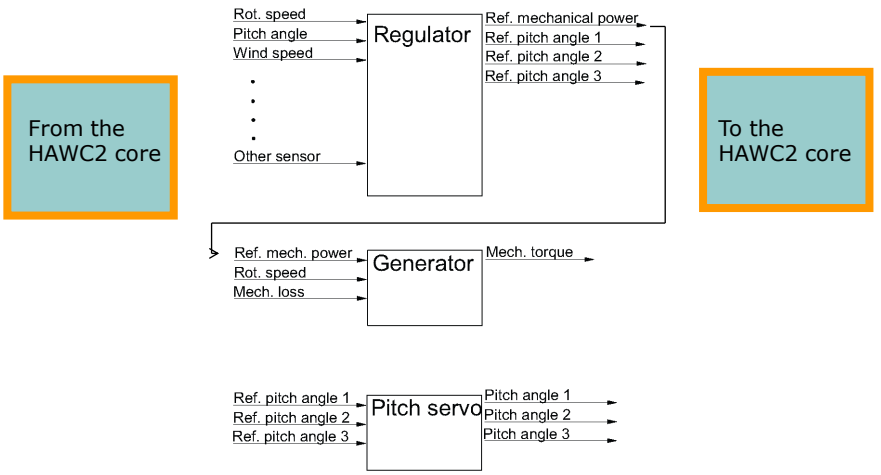

HAWC2_DLL interface

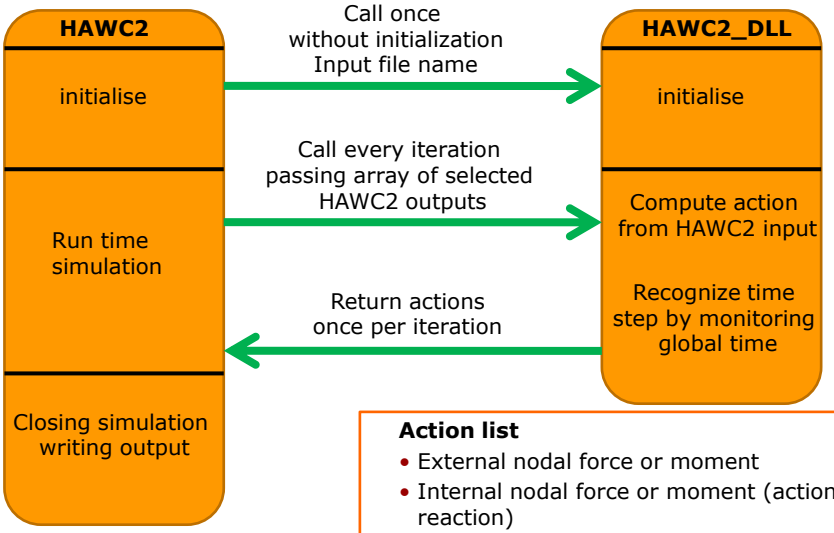

Action list
- External nodal force or moment
- Internal nodal force or moment (action and reaction)
- Bearing angle
- Flap angle

TYPE2_DLL interface

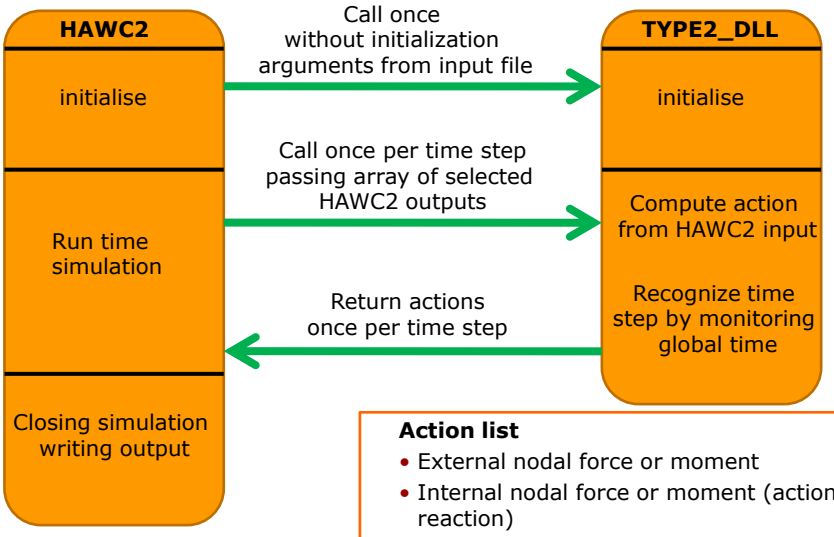

Action list
- External nodal force or moment
- Internal nodal force or moment (action and reaction)
- Bearing angle
- Flap angle

Pitch control with variable speed

Objectives: Optimize power production below rated wsp, limit power and loads at high wsp.

Region

1. Variable speed, opt. power tracking.
2. Constant speed.
3. Power limitation

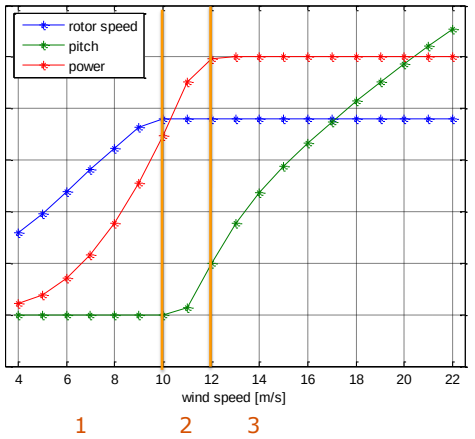

Pitch control at high wind speeds

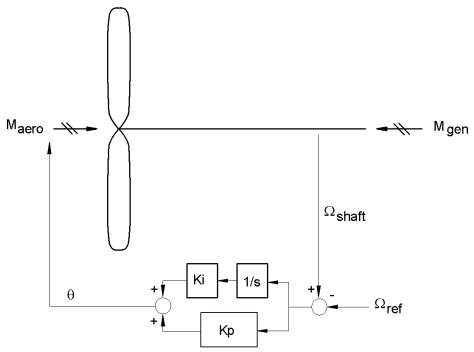

Two different generator stragies:
-Constant power: Good power quality – decent drive train loads
-Constant torque: Good drive train loads – decent power quality

The derivation of good controller constants

The 1 DOF model

$$I\ddot{\varphi} = M_{aero} - M_{gen}$$

The generator torque

$$M_{gen} = M_0 = \frac{P_0}{\Omega_0}$$

"The aerodynamic model"

$$M_{aero} = \frac{1}{\Omega} P(V,\theta) \approx \frac{P_0}{\Omega_0} + \frac{1}{\Omega_0}\frac{\partial P}{\partial \theta}(\theta - \theta_0)$$

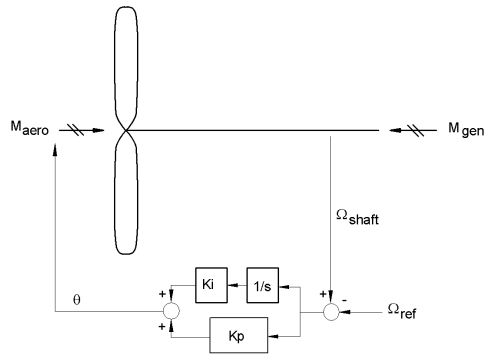

The controller

$$\theta = \theta_I + \theta_p$$

$$\theta_I = \int K_I(\Omega - \Omega_{ref})dt = K_I\varphi, \qquad \Omega_{ref} \equiv \Omega_0$$

$$\theta_p = K_p(\Omega - \Omega_{ref}) = K_p\dot{\varphi}$$

Tuning of control parameters

Insertion of the aerodynamic terms

$$I\ddot{\varphi} = M_{aero} - M_{gen} = \frac{P_0}{\Omega_0} + \frac{1}{\Omega_0}\frac{\partial P}{\partial \theta}\left(K_I\varphi + K_P\dot{\varphi}\right) - \frac{P_0}{\Omega_0}$$

Rewritten into standard form

$$I\ddot{\varphi} + D\dot{\varphi} + K\varphi = 0$$

$$I = I_{rotor} + n^2 I_{gen} \qquad D = -\frac{1}{\Omega_0}\frac{\partial P}{\partial \theta}K_p \qquad K = -\frac{1}{\Omega_0}\frac{\partial P}{\partial \theta}K_I$$

Natural frequency and damping

$$\omega_0 = \sqrt{\frac{K}{I}} \qquad \zeta = \frac{D}{2I\omega_0} \qquad \omega_d = \omega_n\sqrt{1-\varsigma^2}$$

The constants are now given as function of desired control frequency and damping

$$K_I = \frac{\Omega_0 I\omega_0^2}{-\frac{\partial P}{\partial \theta}} \qquad K_p = \frac{2\zeta K_I}{\omega_0}$$

Rule of thumb: $\omega_0 = 0.1Hz \quad \zeta = 0.7$

Response of system

Step change in external torque

Rotor speed

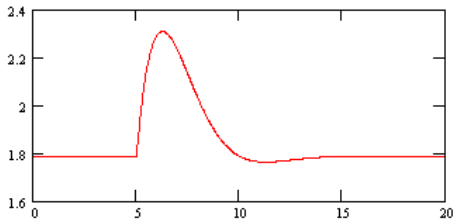

Pitch angle

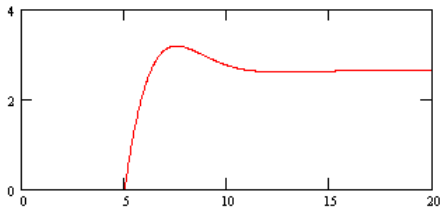

time [s]

Gain scheduling

To ensure a similar response at different wind speeds.

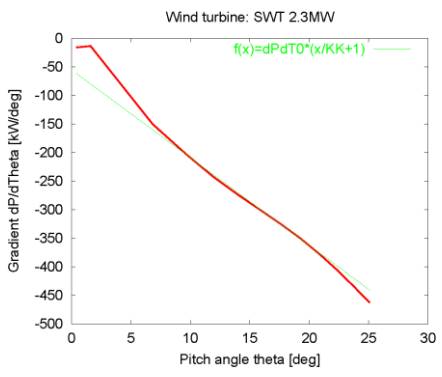

$$G(\theta) = \frac{1}{1 + \frac{\theta}{KK}}$$

KK is the pitch angle where $dP/d\theta$ is 2* $dP/d\theta_0$

Why is the control frequency so important?

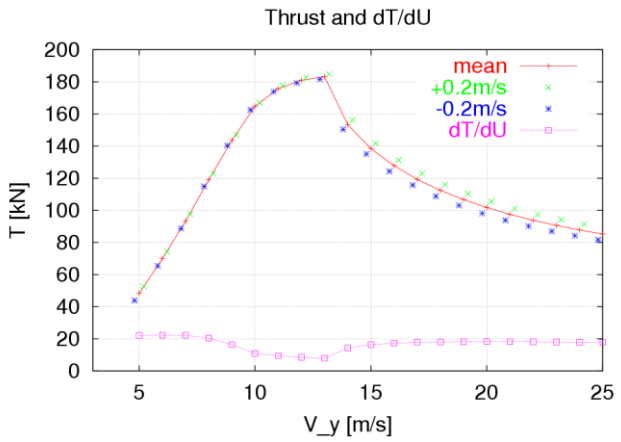

Control diagram "Risø" controller

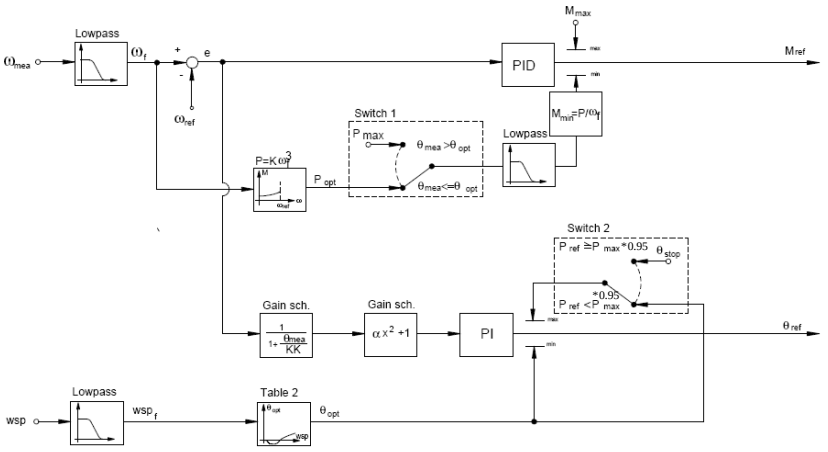

Additional parameters from control file

basic_3ba_input_ct10nl - Notepad

File Edit Format View Help

```
1.267                   // omega_ref              [rad/s]
0.42                    // omega_min              [rad/s]
4.38                    // kga_set                [deg]
10.0                    // rel_limit              [-]
5000                    // Pmax   (mech)          [kW]
1                       // const power (1) or constant torque (0)
1431                    // Low speed K factor [kNm/(rad/s)^2], torque=K*omega^2, K=0.5*rho*A*Cp*R^3/lambda^3*0.8
0.4 0.7                 // f0,ksi                 [Hz],[-]  2'orderfilter variables
0.01                    // tau_gen                [s]
2                       // ndata optipitch
0.0     0.0             // wsp [m/s] pitch [deg]
50.0    0.0
5.0                     // tau_wsp [s]
0.1                     // f0 [Hz]
88                      // pitch stop angle [deg]
```

Ln 15, Col 35

Optimal power tracking at low wind speeds:

$$P = \tfrac{1}{2}\rho A C_p U^3 = \underbrace{\frac{\tfrac{1}{2}\rho A C_p R^3}{\lambda^3}}_{\text{Constant K}} \omega^3 \qquad \lambda = \frac{\omega r}{U}$$

$$T = \frac{P}{\omega} = \frac{\tfrac{1}{2}\rho A C_p R^3}{\lambda^3}\omega^2$$

In practise K is reduced with app 20% due to mech. losses and to ensure safe operation away from stall.

Operation at intermediate wind speeds

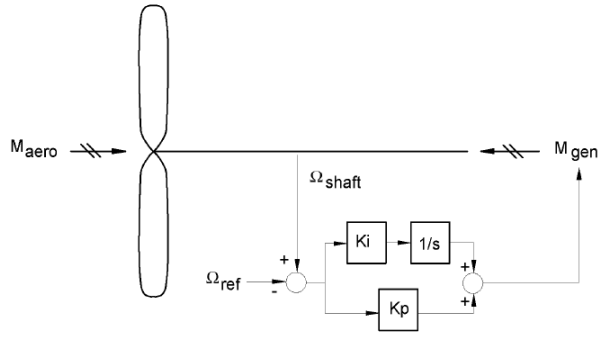

$$M_{aero} = M_{a0}$$

$$M_{gen} = K_{pg}(\Omega - \Omega_{ref}) + \int K_{Ig}(\Omega - \Omega_{ref})dt = K_{Pg}\dot{\varphi} + K_{Ig}\varphi$$

$$K_{Ig} = I\omega_0^2, \qquad K_{pg} = \frac{2\zeta K_{Ig}}{\omega_0}$$

Non-linear gain

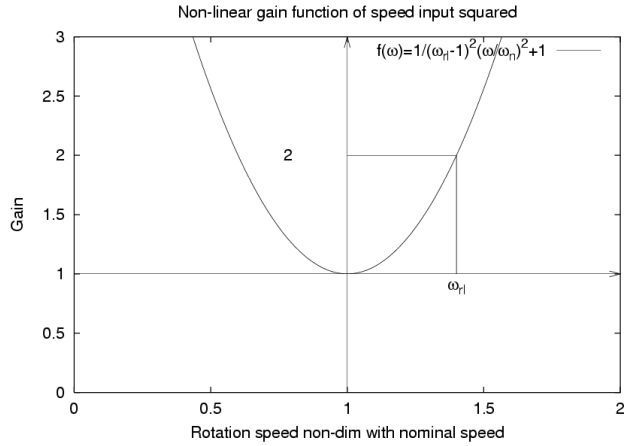

Gain function used with special low frequent towers (floating turbines etc.)

Parameter is non-dim rotor speed where gain equals 2.0

Calculated results from small WT4 BEM code

UDFIL - Notepad

File Edit Format View Help

```
Vind, Akseleffekt, pitch og dP/dTeta (med fastholdt w_induc) :

   U       P       Teta    dP/dTeta  ( m/s, kW, grader, kW/grad)

  5.0   191.7    1.50  -247.8
  6.0   589.9    1.40  -301.4
  7.0  1124.9    1.10  -351.7
  8.0  1816.6    0.50  -394.2
  9.0  2681.1    0.00  -444.2
 10.0  3724.2   -0.40  -450.2
 11.0  4900.4   -0.30  -461.0
 12.0  5376.1    3.70  -758.1
 13.0  5381.4    6.45  -901.7
 14.0  5377.7    8.55 -1019.1
 15.0  5378.9   10.35 -1130.4
 16.0  5379.4   11.97 -1236.1
 17.0  5380.4   13.47 -1338.6
 18.0  5383.0   14.88 -1446.5
 19.0  5381.4   16.22 -1554.1
 20.0  5382.4   17.49 -1657.8
 21.0  5379.6   18.72 -1761.4
 22.0  5380.3   19.90 -1869.9
 23.0  5381.0   21.05 -1985.3
 24.0  5379.6   22.15 -2102.9
 25.0  5378.8   23.23 -2217.4
Cp_max = 0.4869 ved U =10.0000 m/s, dvs ved tiphast.forh. =7.9884

dPdteta(10 grd) = -1108.8   dPdteta(20 grd) = -1879.8

Ref.dPdteta(0 grd) =  -337.8 (kW/grd) og KK = 4.38 (grd)
```

Ln 1, Col 1

These results can also be obtained using the small matlab script RunWT4_v3.m

Response to step change in wind

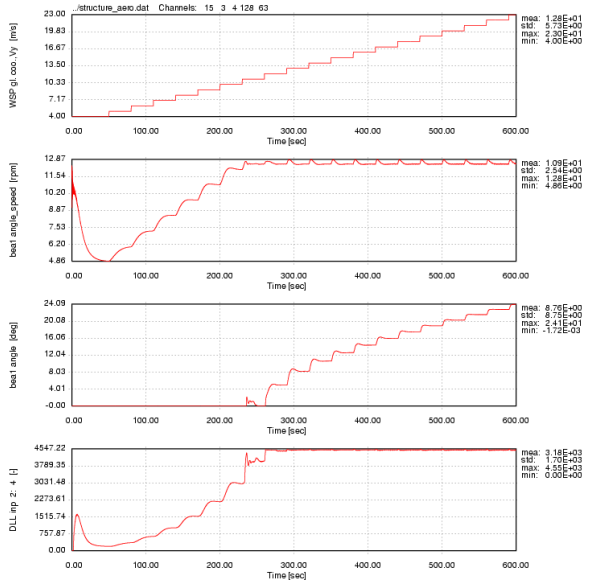

Coupling of control to HAWC2

```
begin dll;
  begin hawc_dll;
    filename  ./control/basic_3ba_ct10nl.dll ;
    dll_subroutine regulation ;
    arraysizes  25 15 ;
;    deltat  0.02;
    begin output;
      general constant 1 ;    inputfile extension                  1
      general time ;                                               2
      constraint bearing1 hub_rot 1 only 2;   speed generator      3
      constraint bearing2 pitch1 1 only 1;                         4
      constraint bearing2 pitch2 1 only 1;                         5
      constraint bearing2 pitch3 1 only 1;                         6
      wind free_wind 1 0.0 0.0 -123.0 ; coordsys (1:glo, 2:ikkerot rotor), 7,8,9
      general constant 2.02 ;   Kp  pitch                          10
      general constant 0.764 ;  Ki   pitch                         11
      general constant 0.00 ;   Kd   pitch                         12
      general constant 2.43E7 ; Kp   torque                        13
      general constant 1.09E7  ;Ki   torque                        14
      general constant 0.0   ;  Kd   torque                        15
      general constant 750 ;    generator stoptime                 16
      general constant 0.2 ;    pitch stopdelay                    17
      general constant 8 ;      pitch stop velmax                  18
      general constant 0 ;      stop type (not used)               19
      general constant -1 ;     cut-in time                        20
      general constant 10 ;     pitch stop delay 2                 21
      general constant 2 ;      pitch stop velmax 2                22
      general constant 10 ;     pitch velmax runtime               23
    end output;
```

Coupling of simple generator

```
begin hawc_dll;
    filename  ./control/basic_3ba_ct10nl.dll ;
    dll_subroutine generator ;
    arraysizes  15 15 ;
;    deltat    0.02 ;
    begin output;
      general time ;
      dll inpvec 1 1; input til h2, dll no 1, plads no 1
      general constant 0.93;       Efficiency factor
      constraint bearing1 shaft_rot 1 only 2;   speed generator
      general constant 1.0 ;
    end output;
;
    begin actions;
      mbdy moment_int shaft 1 -3 shaft tower 10 ;   generator torque LSS
    end actions;
  end hawc_dll;
```


Coupling of simple pitch servo

```
  begin hawc_dll;
    filename  ./control/basic_3ba_ct10nl.dll ;
    dll_subroutine pitchservo ;
    arraysizes  15 15 ;
    begin output;
      general time ;
      dll inpvec 1 2;
      dll inpvec 1 3;
      dll inpvec 1 4;
      constraint bearing2 pitch1 1 only 1;                        3
      constraint bearing2 pitch2 1 only 1;                        4
      constraint bearing2 pitch3 1 only 1;                        5
    end output;
;
    begin actions;
      constraint bearing2 angle pitch1;
      constraint bearing2 angle pitch2;
      constraint bearing2 angle pitch3;
    end actions;
  end hawc_dll;
end dll;
```

Other dll possibilities

type2_dll

```
begin type2_dll;
  name  hss_convert ;
  filename  ./hss_convert.dll ;
  dll_subroutine_init 'Initialize' ;
  dll_subroutine_update 'Sensors' ;
  arraysizes_init  3 1 ;
  arraysizes_update  2 2 ;
  begin init ;
    constant 1 2.0 ; number of used sensors
    constant 2 112.43 ; gearbox ratio
    constant 3 112.43 ; gearbox ratio
  end init ;
;
  begin output ;
    constraint bearing1 shaft_rot 2 only 2 ; rotor
speed in rpm
    constraint bearing1 shaft_rot 3 only 2 ; rotor
speed in rad/s
  end output ;
;
  begin actions;
;    rotor_speed in rpm*gear_ratio
;    rotor_speed in rad/s*gear_ratio
  end actions;
end type2_dll;
```

tcp/ip communication with e.g. Matlab or Matlab/Simulink

```
begin hawc_dll;
  filename  ./tcpip/TCPserver.dll ;
  dll_subroutine tcplink_delay ;
  init_string 1139 ;
  arraysizes  60 60 ;
begin output;
  continue_in_file ./htc/tcplink_sensors.htc ;
end output;
;
begin actions;
end actions;
end hawc_dll ;
```

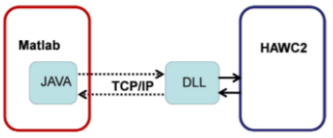

Recent updates - basic_3ba_ct12nl.dll

Slightly easier input and better performance at low wind speeds.

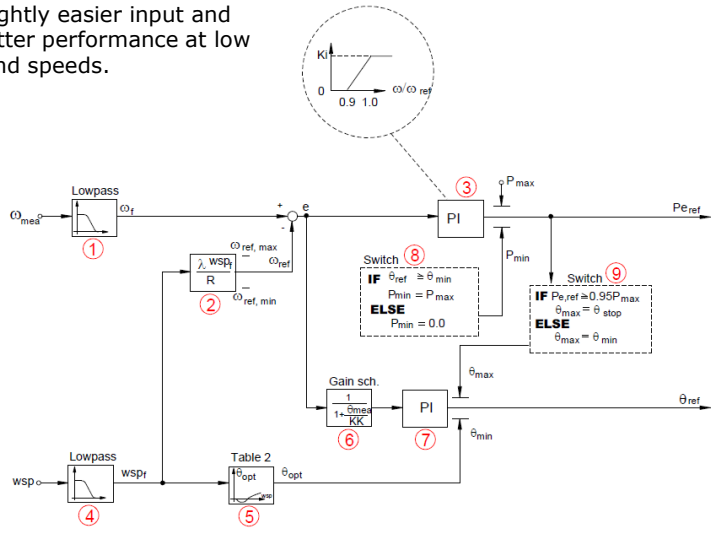

Additional parameters from control file - basic_3ba_ct12nl.dll

basic_3ba_input_ct12nl - Notepad

File Edit Format View Help

```
0.89600                 // omega_ref              [rad/s]
0.45000                 // omega_min              [rad/s]
9.0                     // lambda
89.0954                 // radius                 [m]
5.01327                 // kga_set                [deg]
10.0                    // rel_limit              [-]
10000                   // Pmax  (elec)           [kW]
1                       // const power (1) or constant torque (0)
0                       // Not used
0.4 0.7                 // f0,ksi                 [Hz],[-]  2'orderfilter variables
0.01                    // tau_gen                [s]
2                       // ndata for pitch data, wsp [m/sec], pitch angle [deg]
0.0     0.0             // wsp pitch
50.0    0.0
5.0                     // tau_wsp
0.01                    // f0
90                      // pitch stop angle [deg]
```

Ln 1, Col 1

Optimal power tracking at low wind speeds is done by generator torque control based on wind speed estimation and desired tip speed ratio:

$$\lambda = \frac{\omega r}{U}$$

λ is normally set to 8-9,

Remember to have the minimum speed so 3P stays above the 1st tower frequency

Exercise

- Run the file structure_aero_control.htc 600s
- Run the file structure_aero_control_turb.htc 600s